HSF RoHS

FILE NO :E362810

SPECIFICATIONS
Rated Current:1.0AMP
Contact Resistance:30mΩ Max
Withstand Voltage:500V AC/DC RMS
Insulation Resistance:1000MΩ Min
Operation Temperature:−40°C to +105°C

Contact Material:Phosphor Bronze
Contact Plating:Au or Sn Over Ni
Insulator Material:Polyester(UL94V−0)
Resistance To Soldering Heat:
260℃±5℃, 10s(LCP insulator)

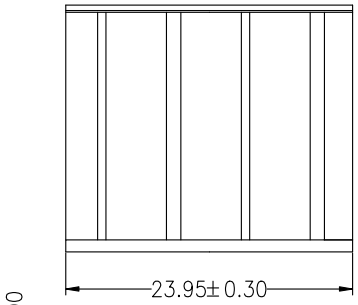

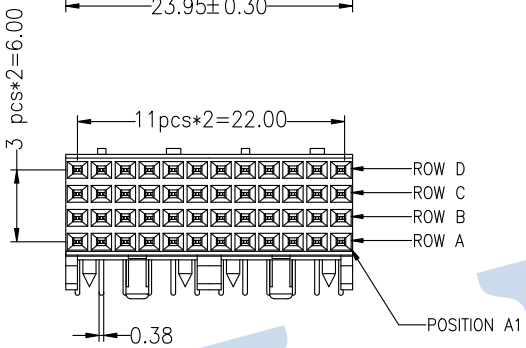

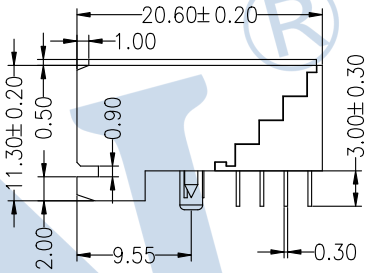

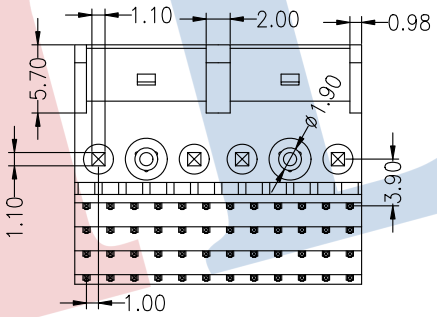

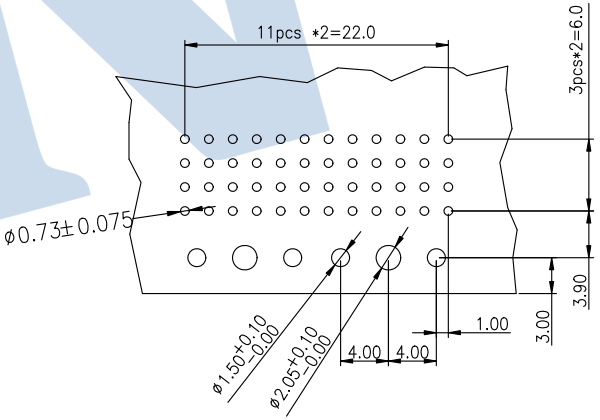

Recommended P.C.B Layout(Top Side)
(PCB BOARD TOLERANCE±0.05)

Ordering Information

3510 4 48 A F R XX BW X X

- No.of Pins: 48P
- Contact Type: F:Female, M:Male
- Contact Plating: G0:Gold Flash, S0:Gold Flash/Tin, S1:2U" Gold/Tin, S2:5U" Gold/Tin, S3:10U" Gold/Tin, S4:15U" Gold/Tin, S5:30U" Gold/Tin, SN:Tin
- Packing: A:Tray, T:Tube

REV	DATE	MODIFICATION DESCRIPTION	CHANGE
A0	2019.06.09	NEW DRAWING	

OPERATION				
DIM	TOL	DRAW	YiYuSheng	19.06.09
X.X	±0.30	CHECK		
X.XX	±0.20			
X.XXX	±0.10			
Angle	±3°	APPROVE		

SCALE	FIT
UNIT	mm
SIZE	A4
SHEET	1/1
PROJ.	

JILN® 深圳市锦凌电子有限公司
SHENZHEN JINLING ELECTRONICS CO.,LTD
Tel: 86-755-27483253 Fax: 86-755-2997-5588

PART NO.	3510448AFRXXBWXX
TITLE:	FUTURE BUS,4*12 Female 90°